7

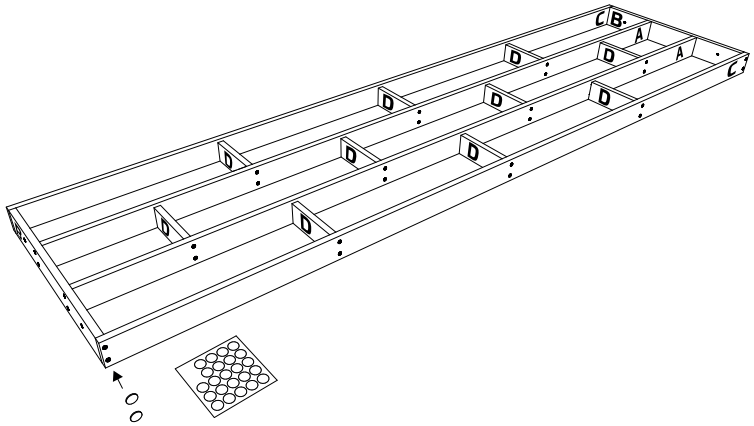

8

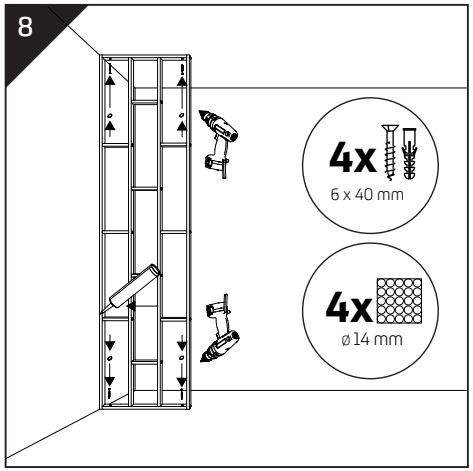

+

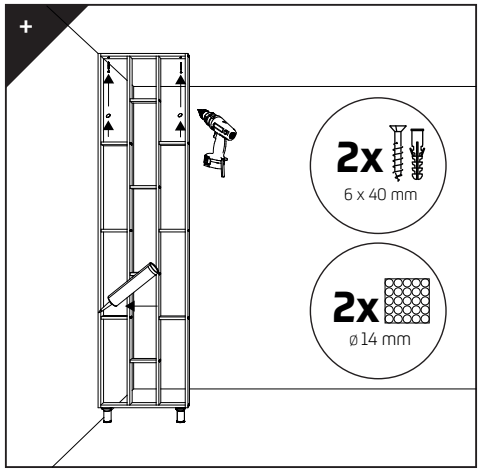

+

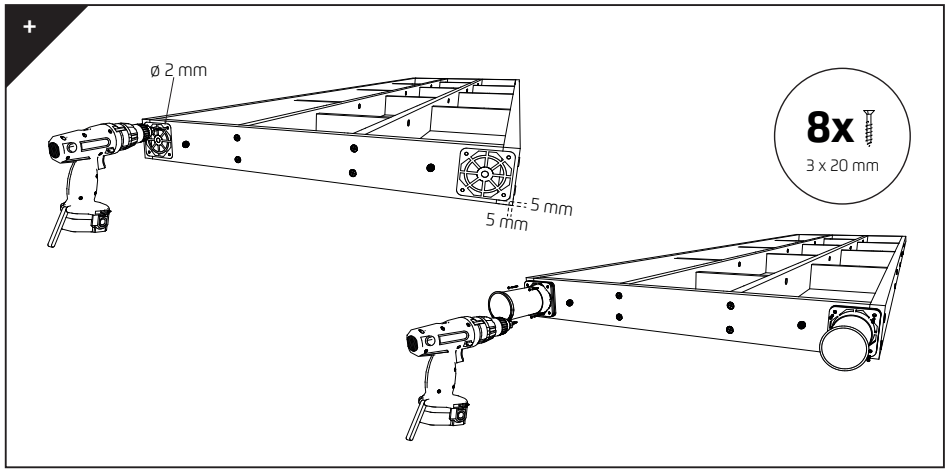

leiste24

MONTAGEANLEITUNG

Design Raumteiler

634x75x2500

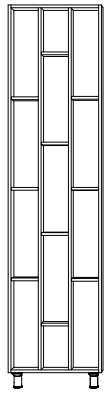

2500 x 75x 19 — C — **2x**

2462 x 75x 19 — A — **2x**

596 x 75 x 19 — B — **2x**

186 x 65 x 19 — D — **10x**

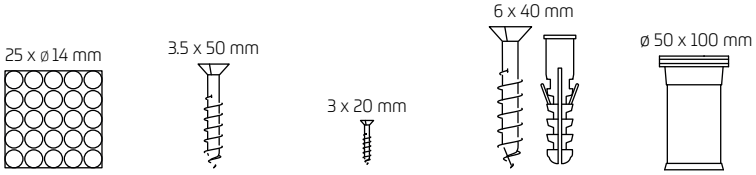

3x **56x** **8x** **4x** **2x**

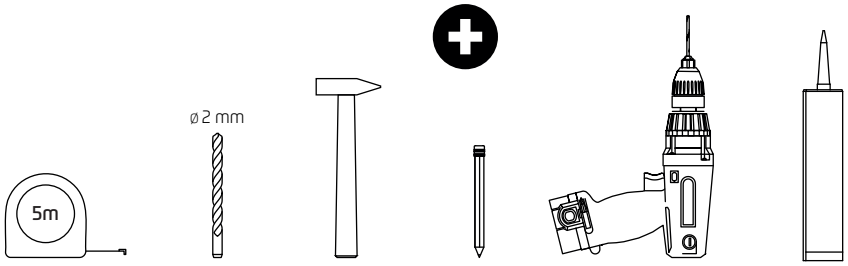

1

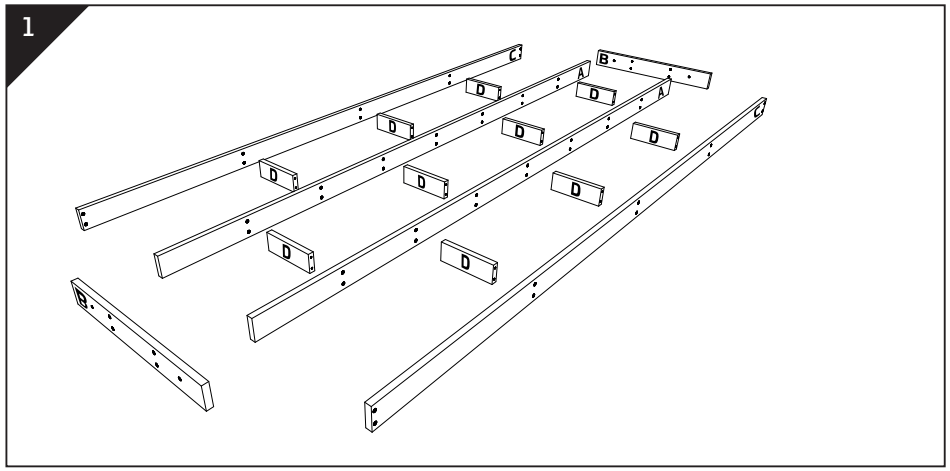
C
B
A
A
D

2

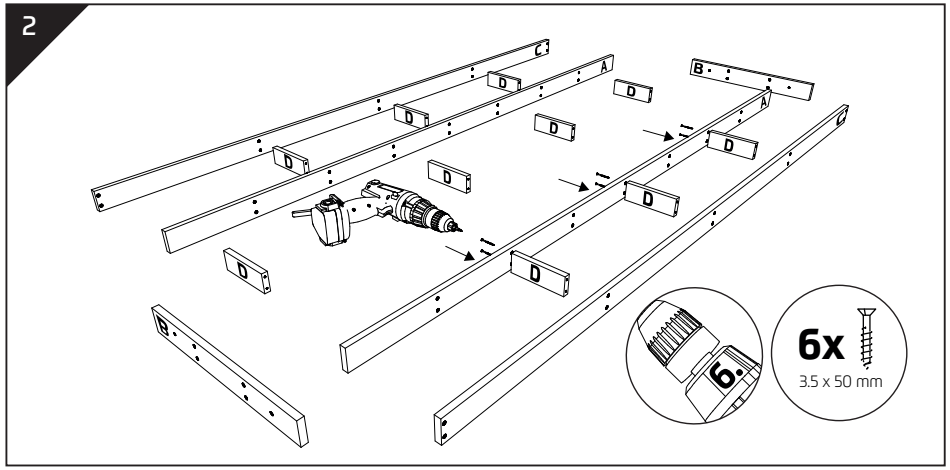
C
B
A
A
D
6x
3.5 x 50 mm

3

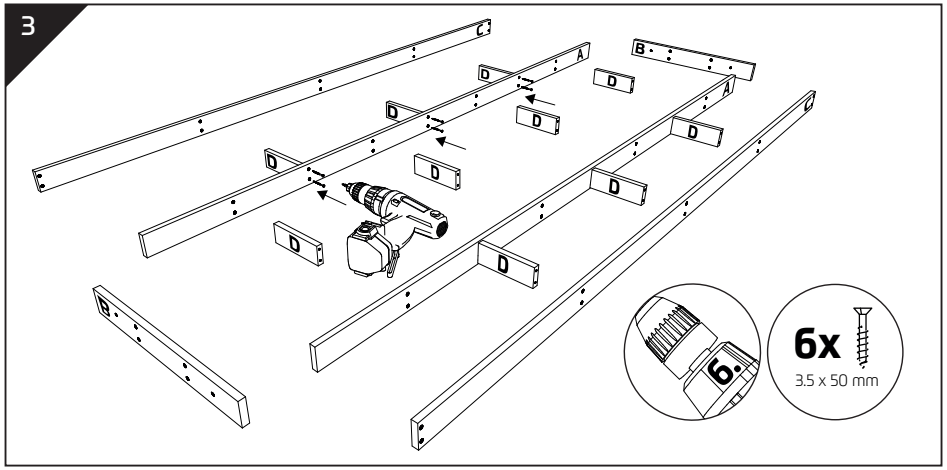
C
B
A
A
D
6x
3.5 x 50 mm

4

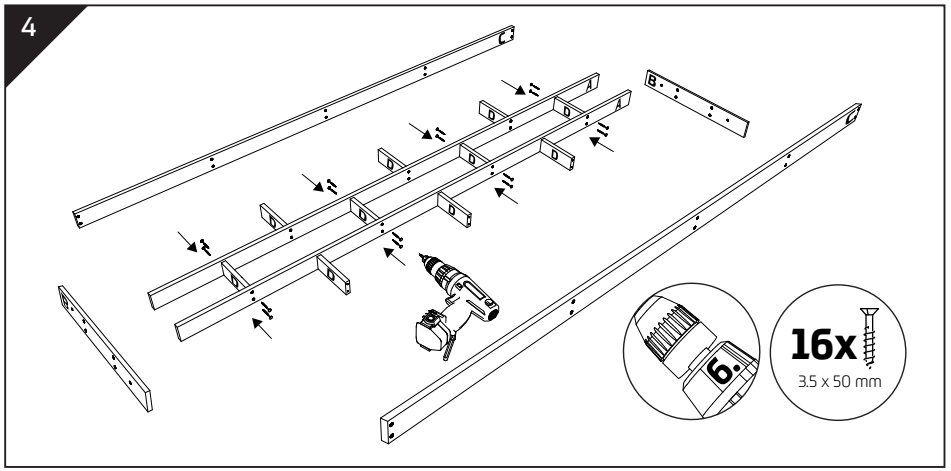
C
B
A
A
D
16x
3.5 x 50 mm

5

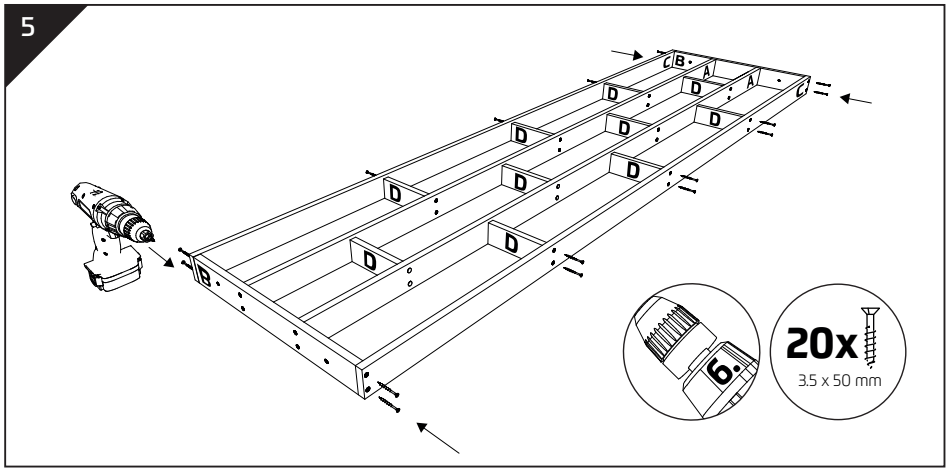
C
B
A
A
D
20x
3.5 x 50 mm

6

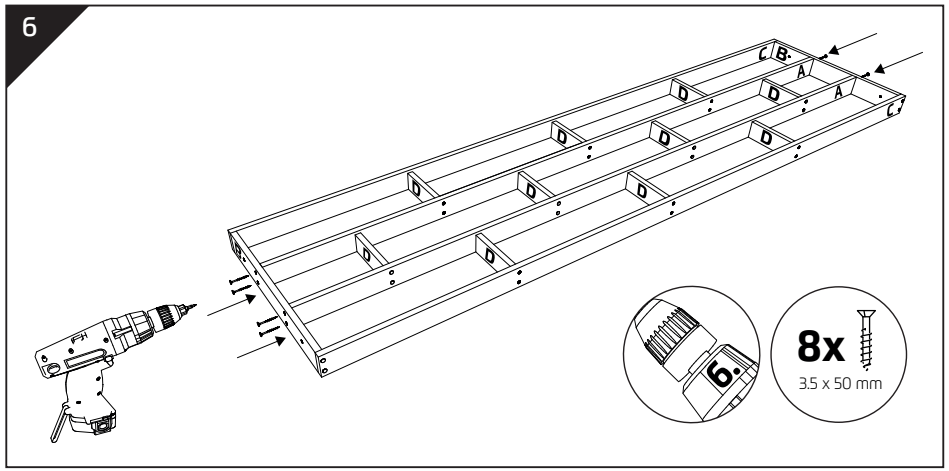
C
B
A
A
D
8x
3.5 x 50 mm